Available online www.ejaet.com

European Journal of Advances in Engineering and Technology, 2018, 5(9): 730-739

Research Article ISSN: 2394 - 658X

Design study of community-scale reverse osmosis (RO) based solar-powered desalination system for remote locations in Pakistan

Danial Laiq, Abdul Aleem and Asad A. Zaidi

Department of Engineering Sciences, PN Engineering College, National University of Sciences and Technology, Karachi, Pakistan – 7550
asadali@pnec.nust.edu.pk

ABSTRACT
The inaccessibility of clean drinking water is a problem that has become increasingly evident in all the developing countries of the world. The lack of grid connected power in remote locations or frequent power outages further exacerbate this issue. In the current research work, a simple design study of a PVRO (Photovoltaic-powered reverse osmosis) based approach was conducted and a prototype was developed to evaluate its performance. The solar powered desalination system under discussion is designed to address the drinking water requirements of a small family and treat brackish groundwater commonly used for drinking purposes in remote locations. The design utilizes solar PV power as an energy source and produces up to 70 liters clean drinking water in six-hour operation. An innovative pre-filtration box is also incorporated in the design which enhances the overall effectiveness of the system. The system is designed keeping user-friendliness and ergonomics in mind, which makes its operation easy for people belonging to various levels of education. The design is selected after going through extensive literature review and the details of the design are outlined in detail in this article.

Key words: solar power, reverse osmosis, community-scale, desalination, pre-filtration

INTRODUCTION

About one billion people do not have access to safe drinking water [1]. That is about one eighth of all the people living right now. In spite of the major advances in the ways we lead our lives water indeed remains the most basic ingredient of life on Earth. According to World Health Organization guidelines for drinking water quality, access to safe drinking water is essential to health, a basic human right and a component of effective policy for health protection [2]. But despite its importance inaccessibility of safe drinking water is an issue faced by all the developing countries of the world and the situation in Pakistan is no exception.

The availability of water in Pakistan is decreasing by the day, owing to the prodigious population growth and misuse of available resources [3]. The quality of available drinking water is also poor with high levels of pathogenic and mineral contamination being the factors of major concern [4, 5]. A majority of population in the country lacks access to safe drinking water and because of the predominant consumption of contaminated water incidence of waterborne diseases are increasing rapidly [6]. Majority of the population especially the people living in remote areas of the country are at a high risk of water-related diseases such as gastroenteritis, cholera, diarrhoea, dysentery, hepatitis A and E, typhoid, acute respiratory infection (ARI) as well as Blue Baby Syndrome [6]. Access to safe drinking water is limited to only 16% of the total population [7]. Some of the major factors which continue to exacerbate this issue include new environmental constraints, unchecked urbanization, high population growth rate and rapid industrialization. According to the estimates, hygiene-related disease, water and sanitation cost more than PKR 112 billion to Pakistan's economy per annum due to lost earning and health costs [8].

Pakistan is also facing a chronic energy crisis. Long hours of load shedding are observed in urban as well as rural areas of the country. Furthermore, an appreciable amount of population resides in far-flung areas of the country with no means of power supply. A great need is felt for a water treatment system which adequately addresses these challenges and produces water fit for human consumption.

Desalination is one of the most reliable water purification processes. The desalination of water can be carried out through different techniques and among various techniques; Reverse Osmosis (RO) is one of the most energy efficient processes

[9]. Fig 1 shows process-wise desalination capacities worldwide, highlighting the high capacities share of RO globally. In the RO process pressure-driven membranes are used for salt-water separation. High-pressure water is pumped through the membrane from which the brine left behind is discharged as reject and pure water permeates out.

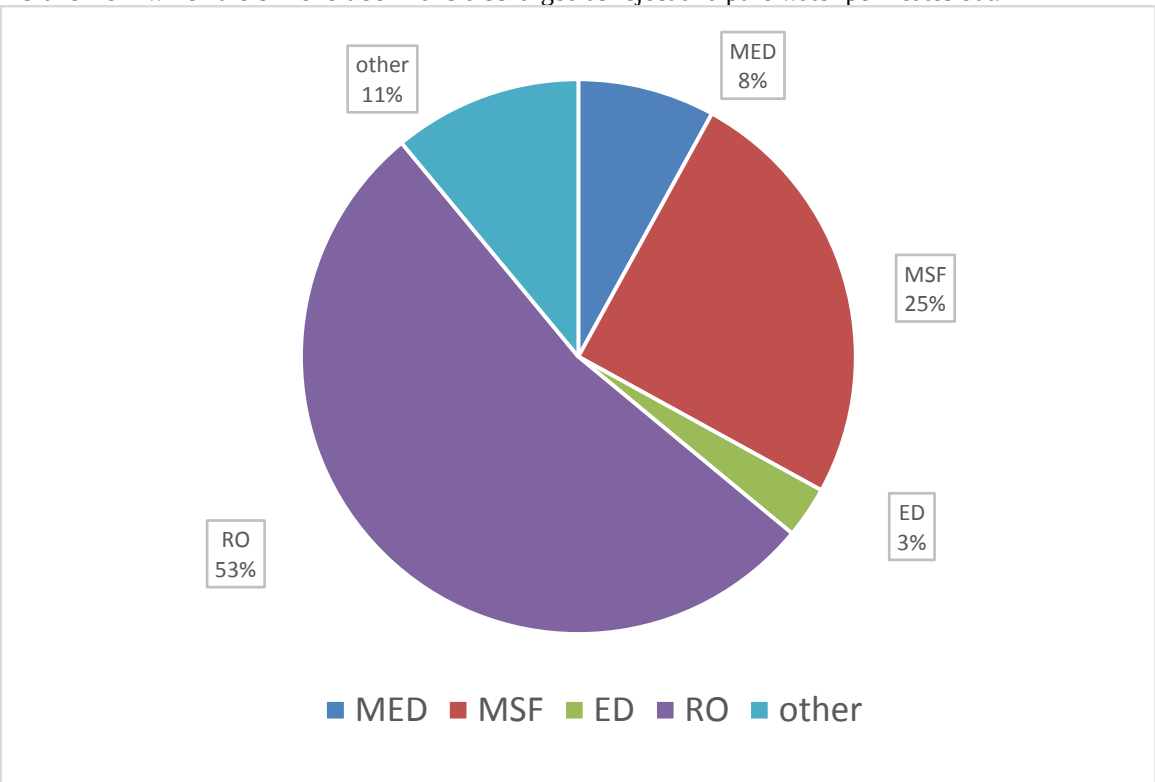

Fig. 1 Global process-wise desalination capacity [10]

Desalination is an energy intensive process and the economic feasibility of the process largely depends on its energy efficiency. Table 1 compares major desalination technologies across important parameters such as energy consumption, cost of water, technology growth trend and environmental impact. The energy consumption in RO, Table 1, varies mainly on water salinity among different parameters. In the RO process, specific energy consumption is the lowest compared to the other commercial technologies. The operating costs of RO have reduced over the years due to development of low-cost efficient membranes and usage of pressure recovery devices. Seawater RO cost has gone down to about 0.53 $/m3 in large plant of Ashkelon at the Mediterranean Sea [11]. However, in the case of high water salinity, high turbidity, high feed water temperature, high marine life presence (as in some sites), the cost will be high near to MSF and MED since the RO unit may require expensive pre-treatment system. These thermal desalination technologies i.e. MSF, MED are complex, and don't scale efficiently to smaller plant sizes that are the focus of this paper. Whereas, the low specific energy requirement for low salinity water (brackish water) and lower operational costs make the use of RO for small-scale community level water purification systems economically feasible and therefore highly suitable.

The greenhouse gas emissions of RO will be less due to lower specific energy consumption than the emissions by an MSF or MED when used with conventional power source. The environment impact of a community-scale RO could potentially be reduced to a bare minimum when used with a renewable power source such as solar energy. Solar photovoltaic based RO (PVRO) is one such arrangement which provides a low-cost solution with the least ecological footprint [12, 13].

Table -1 Comparison of major desalination technologies [9]

	MSF	**MED**	**RO**
Energy requirement (kWh/m^3)	Electrical (SA or CG)[1]: 3.5–5.0 kWh/m^3	SA: Electrical: 1.5–0.5 kWh/m^3	Seawater (SW): 4–8 kWh/m^3
	SA: Thermal: 69.44–83.33 kWh/m^3	CG: Electrical: 1.5–2.5 kWh/m^3	
	CG: Thermal: 44.44–47.22 kWh/m^3 [10]	SA: Thermal: 41.67–61.11 kWh/m^3	Brackish water (BW): 2–3 kWh/m^3[14]
		CG: Thermal: 27.78 kWh/m^3[10]	
Cost of water ($/m^3)	0.9–1.5 $/m^3; the cost reduces with	Around 1 $/m^3; 0.827 $/m^3 for Jubail II plant;	0.99 $/m^3 for seawater RO; 0.53 $/m^3 for

	cogeneration and unit capacity [15]	the cost reduces with cogeneration use of	Ashkelon 0.2–0.7 $/m^3 for brackish water [11, 16, 17]
		thermal VC (TVC) and unit capacity [18, 19]	
Technology growth trend	Moderate	High	High, with membrane technology growth
	Is a mature technology	Is a mature technology	RO will become more and more economical
Environmental impact	Discharge is 10–15 °C hotter than	Brine discharge and temperature rise are similar to MSF [20]	Brine discharge at ambient temperature. TDS increase of 50–80% [20]
	ambient, TDS increase of 15–20% [20]		

Currently available RO based brackish water desalination systems are mostly powered by grid-connected power. However, such an arrangement paired with solar PV power as the energy source has received limited attention and not many unique design solutions that offer portability and also cater to varied water contamination levels have been introduced.

In Pakistan, the southern coastal belt and the interior regions of Sindh and Balochistan provinces have good solar exposure most of the year [21], thus make any PVRO based system is a promising approach to meet the fresh water needs of local population.

The present study aims to provide a viable community-scale PVRO solution which draws advantages from the vast solar potential of the country to address the difficulty of accessing clean drinking water for common Pakistani household. The system is capable of producing more than 70 liters of clean drinking water in one day of operation. It is designed to treat brackish groundwater commonly used in remote areas and make it fit for drinking purpose, especially in locations where grid-connected power is not available.

MATERIALS AND METHODS

The final design is developed according to the majorly found TDS (Total Dissolved Solids) values of brackish groundwater samples in our survey and the various research reports regarding the groundwater quality in Pakistan [22]. The system is designed keeping in mind portability, user-friendliness and ease-of-use for people belonging to different levels of education.

The selected feed water quality comprises of all the major contaminants broadly described below:

- Pathogenic Contaminants
- Total Dissolved Solids (TDS)
- Turbidity: 2.6 (NTU)

Based on the water quality parameters the design of the system was finalized. It consists of the following important components:

- Sediment Filter
- Carbon Filter
- DC Diaphragm Pump
- Reverse Osmosis Membrane

The process flow diagram of the system is as shown in Fig 2.

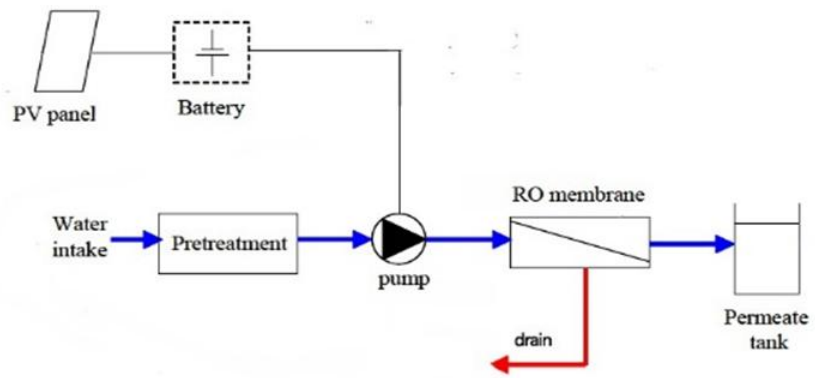

Fig. 2 Process flow diagram

High Flow rate water pre-filtration box

The pre-filtration step in water treatment systems is an important part of the water purification process. The efficiency of this step alone can greatly impact the overall efficiency of the process and ultimately the permeate water quality. Owing to the importance of water pre-filtration especially in small-scale RO systems, an indigenously designed innovative water pre-filtration system is also developed within the purview of our research work.

The pre-filtration box is made of 6 mm acrylic sheet. The box is divided into 3 compartments; two for the sediment and cartridge filters and one will act as an intermediate reservoir. The outside dimensions of the box are 45.2 x 50.6 x 12.7 cm. The design of Pre-filtration box is critical in our overall system design. The design of the pre-filtration compartment is unique and was completely conceived by ourselves. The design is supported by extensive calculations and the attached CAD model was made in accordance of the design calculations observed.

The design of the pre-filtration box allows the filters to be arranged horizontally as opposed to the vertical arrangement. Through this arrangement, a greater flow of water can be passed through the filters thereby increasing the overall rate of the pre-filtration process. The top most compartment houses the sediment filter. On the base of this compartment, two holes of 1.905 cm with an end to end distance of 38 cm are made. A PVC pipe connects the horizontally lying cartridge filter via an elbow on either side. The 25 cm cartridge filter, 5 cm elbow and 1.5 cm tube between elbow and filter on either side make up the 38 cm. A gate of 5.8 x 11.5 x 0.6 cm on the left side wall is placed which is tightened by screws on a boundary layer

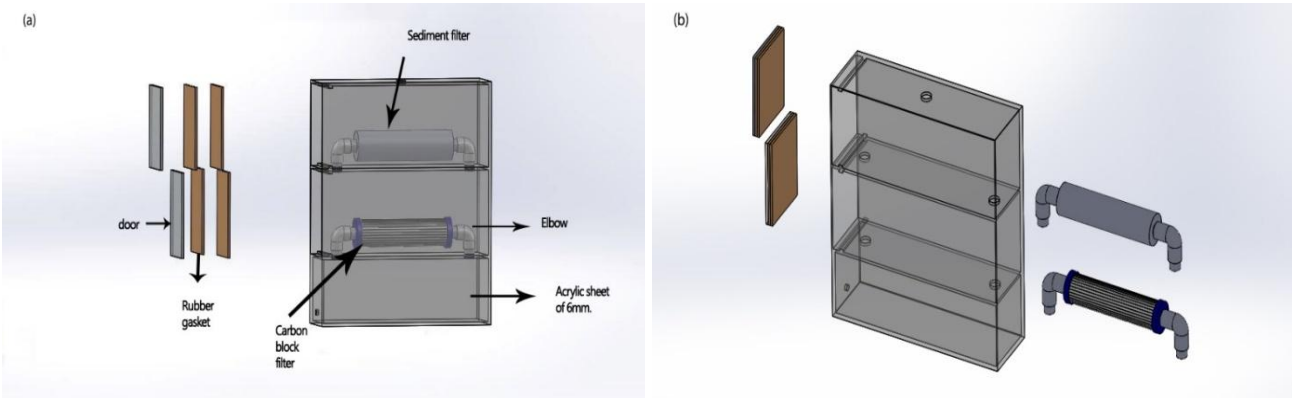

Fig. 3(a-b) Innovative high flow rate water pre-filtration box

of soft rubber. A 1.905 cm hole is made on the top surface which serves as the main water inlet. All the holes and the door are sealed by a sealant to protect any kind of leakages. The former will also have rubber washers on either side to further restrict leakages.

The compartment of the carbon block filter is of the same design except that the top hole will be replaced by the two holes of the base of the top compartment. The bottom most compartment has a height of 13.24 cm. In this compartment, the filtered water is accumulated and supplied onward to the pump through the ½" hole.

Design of Pre-filtration Box

The determination of water pressure when it passes through the pre-filtration box was essential in designing the pre-filtration box. Bernoulli's equation is used for calculation of pressures across the pre-filtration box (Fig.4):

$$P_1 + \frac{1}{2}\rho V_1^2 + \rho g h_1 = P_2 + \frac{1}{2}\rho V_2^2 + \rho g h_2$$

∴Pressure drop across sediment filter = 0.5 PSI @ 3 LPM (Fig 5)

∴Pressure drop across carbon-block filter = 0.5 PSI @ 3 LPM (Fig 6)

∴Pressure at the inlet of the box is assumed to be ~ 1.3 PSI @ 3 LPM

∴Pressure at the bottom of second compartment = P1= 1.3-0.5-0.5= 0.3 PSI

$\dot{Q}1$= 3LPM = 5x10-5 m3/s

$\dot{Q}2$= 1.2LPM = 2x10-5m3/s

V1= $\dot{Q}1$/A1= $\frac{5E-5}{2.85E-4}$= 0.1754 m/s

V2=$\dot{Q}2$/A2=$\frac{2E-5}{1.13E-4}$ = 0.1769 m/s

$$P_1 + \frac{1}{2}\rho V_1^2 + \rho g h_1 + P_L = P_2 + \frac{1}{2}\rho V_2^2 + \rho g h_2$$

$P_2 = P_1 + \frac{1}{2}\rho(V_1^2 - V_2^2) + \rho g h_1$ ∴ h2=0

$P_2 = 2067.87 - 0.2639 + 994.6$

$P_2 = 3062.296\ Pa$

$\boldsymbol{P_2 = 0.4psi}$

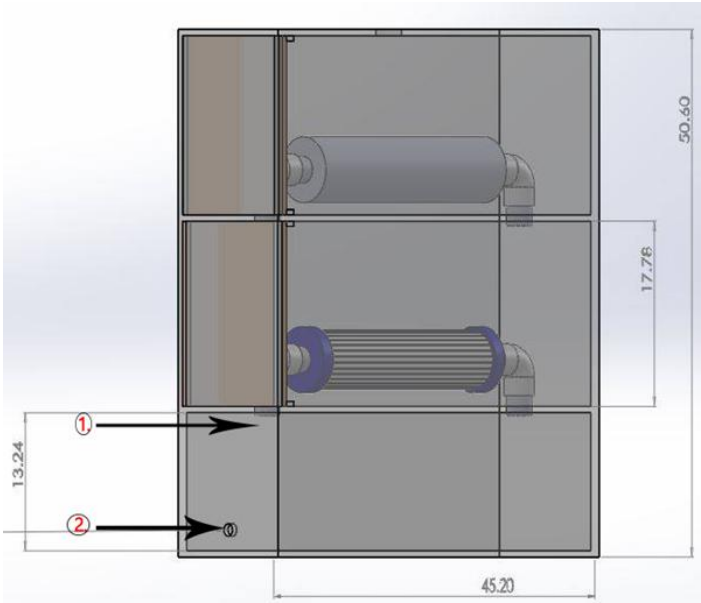

Fig. 4 Bernoulli points of consideration

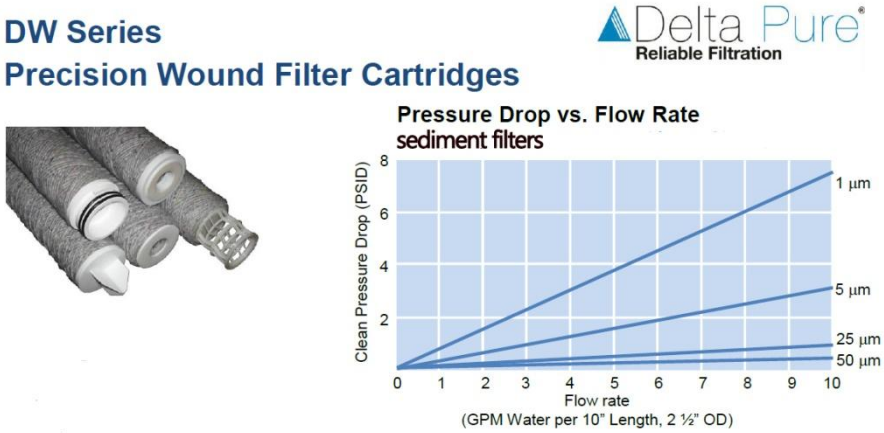

Fig. 5 Pressure drop in sediment filters (Delta Pure spec sheet) [23]

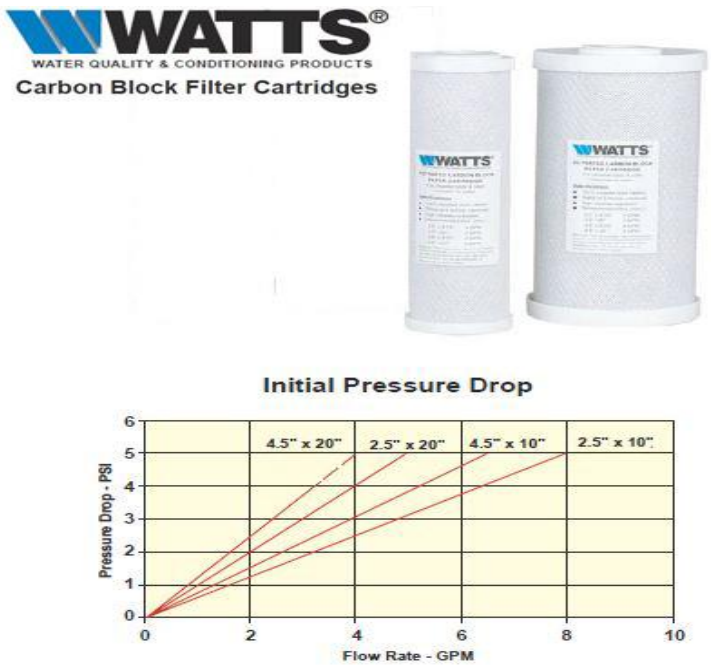

Fig. 6 Pressure drop in Carbon block filters (Watts spec sheet) [24]

DC Pump

The sediment filter and the carbon block filter require very less amount of pressure which is easily achieved by the gravitational pull of the source water. Whereas a pump is required to provide the additional pressure to drive the water through the RO membrane.

Diaphragm pump commonly known as booster pump is used in our system which is a positive-displacement type pump, suited for high heads, higher specific gravity fluids and providing constant discharge pressure. The pump selected for our system is after consideration of the RO membrane pressure requirement and solar PV power viability. Table 2 shows the he detailed specifications of the pump selected.

Table -2 Pump specifications

Parameters	Pump Specifications
Type	Positive-displacement type pump
AC/DC power Wattage	DC-powered 24 W
Voltage	24 V
Current	1 amp
Rated Flowrate	39 l/hr ; 1.2 l/min
Rated Pressure	145 psi

Pump & RO Membrane Calculations

For our prototype the amount of water produced in 6 hr operation during daytime running is selected to be a minimum of 50 ltr at least which is equal to a flow rate of 0.138 lpm.

The rated pump flow rate = 1.2 lpm.

On average the drain to permeate ratio for RO = 4:1 which means about 75-80% of water is rejected.

Thus, the rejected water flow rate = 1.2*0.8= 0.96 lpm

From the above calculation it can be concluded, 0.24 lpm will be the output permeate flow rate in 6 hr operation.

Therefore, 0.24 lpm* 60min * 6hr = 86.4 liters

Since the max RO membrane capacity = 75 gpd (24hr).

So, for 6 hours operation: 75/4 = 18.75 gallons of water can be produced

18.75*3.78= 70.875 liters (calculated water that can be used)

And because RO membranes come in standard sizes only i.e. 50, 75, 100 GPD etc.

Therefore, RO of 75 GPD capacity is selected for our prototype.

RO Membrane

A cross filtration process is employed in the RO membrane with a configuration such that only a limited amount of water passes through the membrane and the remainder is rejected through the drain.

For effective running, the RO should be operated above 90 psi pressure. Generally, the permeate quality increases with the increase in feed water pressure.

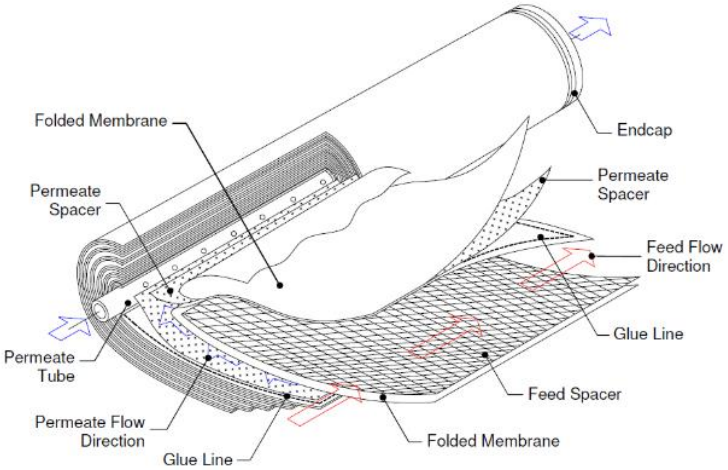

Fig. 7 Schematic diagram of RO Membrane

Selected RO Membrane

The membrane used in our system is a spiral wound polyamide composite model TW30-1812-50 from Dow Filmtec. Table 3 shows the specifications of the membrane provided by the manufacturer.

The membrane capacity is rated at 75 gpd. Carbon-block and sediment filters are recommended to be used with this membrane for chlorinated water. The residual amounts chlorine generally present in tap water damages the thin film composite (TFC) layer which in turn decreases a membrane's efficiency and overall life.

Table -3 Characteristics of RO membrane used in the system (provided by manufacturer) [25]

Product Name	**TW30-1812-50**
Membrane Type	Polyamide Thin Film Composite
Dimensions	1.8" x 12"
Max Operating Temperature	45°C
Max Operating Pressure	10 bar
pH Range, Continuous Operation	2-11
Free Chlorine Tolerance	< 0.1 ppm

Solar Panels

Table -4 Power requirement for solar

Parameters	**Specifications**
Equipment	DC Pump
Voltage	24 V
Current	1 amp
Power	24 watts
Hours of operation	6 hr

Total watt hours= 24*6= 144 Watt hours (Wh)

The following losses are considered for battery Ampere hour (Ah) calculation.

∴ Charge Controller losses= 15%

∴ Battery losses= 15%

∴ Line losses= 5%

Ampere hour = 144 / (0.85*0.85*0.95*24) = 8.74 Ah

The required voltage is 24V and one panel can only provide max 17.68 V. So, two solar panels are needed with series connection. Two batteries in series configuration are also needed along with a charge controller for a smooth power supply to the load.

Table -5 Power requirements of the system

Equipment	**Qtty**		**Rating**
Solar Panels	02		30 W
Batteries	02		12 V/9Ah

The DC pump used in our system is powered by two mono-crystalline solar panels of 30 W each to supply the required 24 V. Each panel is 57 cm in length, 41 cm in width and 25 cm in depth. Max rated current and voltage of each panel is 1.71 A and 17.5 V respectively. Approximate weight of a panel is 2 kg.

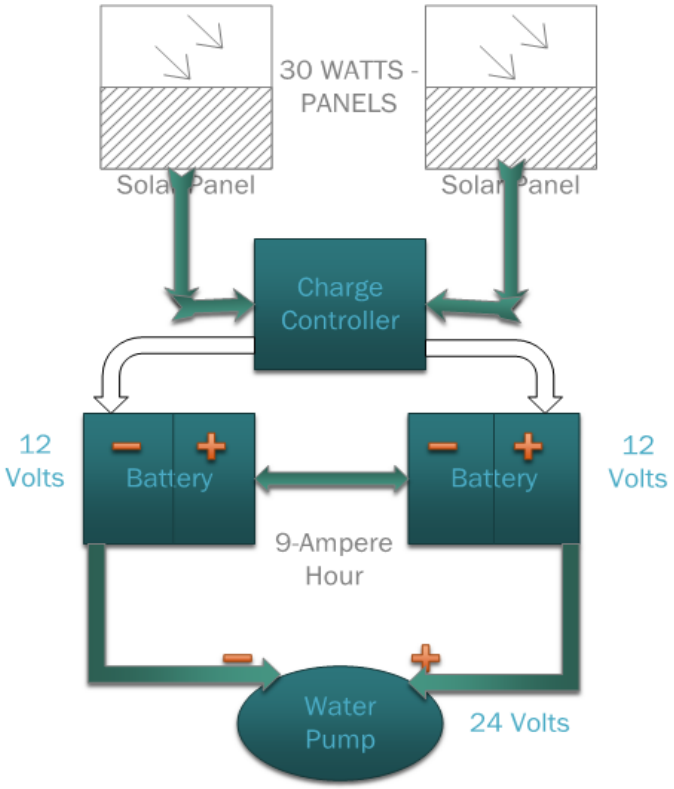

Fig. 8 Schematic diagram of solar configuration

The solar panels are connected to a charge controller which is further connected to the batteries and the load (pump). The function of the charge controller is to check and control the amount (rate) of current supply to the batteries which helps in preventing over-charge and complete discharge of the battery. 12V/9Ahr batteries are selected whose primary purpose is to ensure stable supply of 24VDC to the pump.

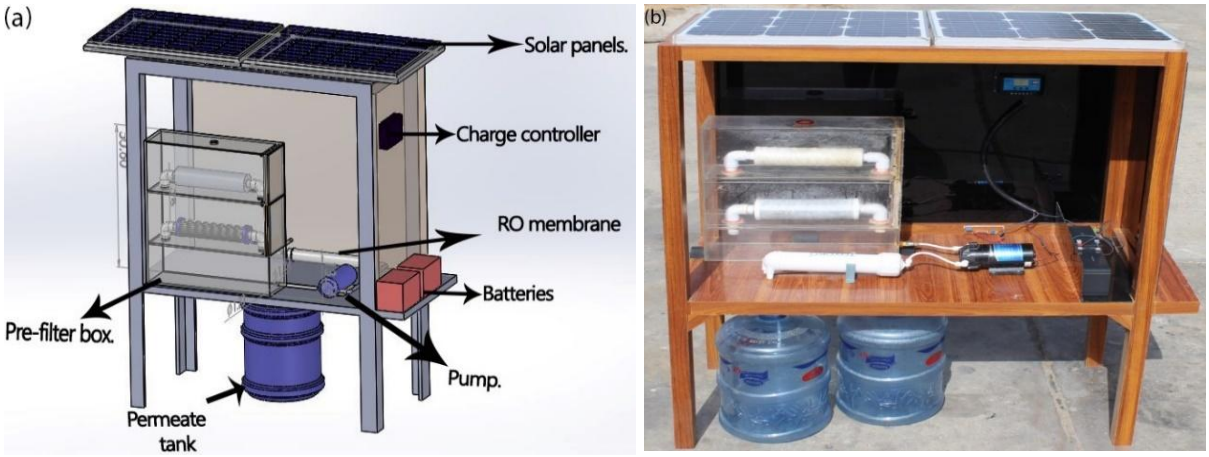

Fig. 9(a-b) Final CAD render and working prototype of the solar power desalination system

RESULTS AND DISCUSSION

The success of the design under consideration hinges on its ability to successfully purify water and make its quality consistent with the pure water standards. Therefore, for the purpose of water quality testing several samples of water were collected from various locations of Karachi. The TDS contents of these samples were measured from the TDS meter and samples with high TDS values was sent to PCRWR laboratory (Water quality testing research lab in Karachi, Sindh) for further chemical testing of the sample. The water sample from Abbas town area of Karachi was found to contain highest TDS concentration as well as appreciable hardness and Calcium, Chloride, Potassium, Sodium and Nitrate concentration. The test results from PCRWR lab shown in Table 6, mention the concentration levels and clearly deems the water unfit for drinking.

Output Water Test

The selected sample was used to measure the effectiveness of our system and determine the extent of purification of water. The tested water report of the said water sample after it was run through our system is as shown in Table 7 which shows the decreased concentration of various impurities and declares the water sample completely fit for human consumption. The sample has an output TDS value of 82 ppm which is well within the safe water guidelines set by WHO. The excessive mineral and bacterial contamination as well as high hardness level has been effectively decreased thus making the water so produced consistent with the safe water standards.

The Pakistan Council for Research in Water Resources (PCRWR) laboratories has carried out the chemical testing of the water samples under the supervision of Dr. Ghulam Murtaza, senior research officer in charge at Karachi, Sindh, Pakistan.

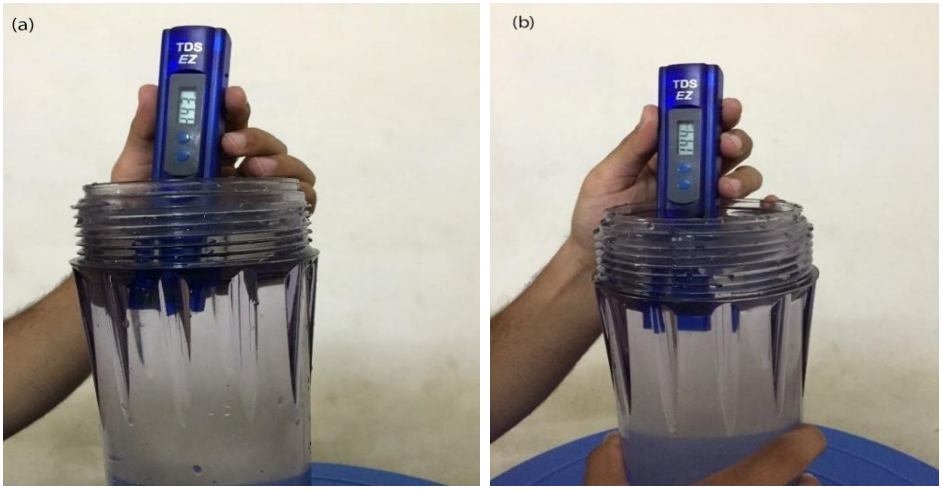

Fig. 10(a-b) TDS testing of water samples from Karsaz area (a) and Abbas town (b)

CONCLUSION

The use of solar PV power with RO coupled with viable innovations is a promising approach to solve clean water accessibility issue faced by remote communities of the developing world where clean water and grid power continue to be a luxury. The design arrangement of community-scale PVRO based desalination system presented in this article is tested and experimental results prove that it can conveniently fulfil clean drinking water requirements of a small family. The system produces approx. 70 liters of clean drinkable water in six-hours of operation. The water is consistent with all the safe water standards and the system is ergonomically suitable to be operated by people from all levels of education. The innovative pre-filtration mechanism employed in the project enhances pre-filtration effectiveness by ensuring higher flow rates. The performance of the prototype under discussion was found satisfactory and the overall results encourage us to commercialize a more robust product based on this platform.

Table -6 Water quality analysis report of Abbass town water sample before running through solar desalination system. The sample was declared unfit for drinking purpose for analyzed parameters under prescribed standards. The water quality tests were conducted by PCRWR laboratories [26]

S. No.	Water Quality Parameter	Reference Method	Permissible Limits	Results
1.	Bicarbonate (mg/l)	APHA	NGVS	450
2.	Calcium (mg/1)	APHA	75 (PSI)	108
3.	Turbidity (NTU)	APHA	5 (WHO)	2.6
4.	Chloride (mg/1)	APHA	250 (WHO)	267
5.	Conductivity (micro-S/cm)	APHA	NGVS	2160
6.	Hardness as $CaCO_3$ (mg/1)	APHA	500 (WHO)	530
7.	Magnesium (mg/1)	APHA	150 (WHO)	63
8.	pH	APHA	6.5-8.5 (WHO)	7.19
9.	Potassium (mg/1)	APHA	12 (EC)	15.4
10.	Sodium (mg/1)	APHA	200 (WHO)	240
11.	Sulfate (mg/1)	APHA	250 (WHO)	160
12.	TDS (mg/1)	APHA	1000 (WHO)	1382
13.	Nitrate (mg/1)	APHA	10 (WHO)	12.73
14.	Fluoride (mg/l)	APHA	1.5 (WHO)	0.85

Table -7 Water quality analysis report of Abbass town water sample after running through solar desalination system. The sample was declared fit for drinking purpose for analyzed parameters under prescribed standards. The water quality tests were conducted by PCRWR laboratories [26]

S. No.	Water Quality Parameter	Reference Method	Permissible Limits	Results
1.	Bicarbonate (mg/l)	APHA	NGVS	20
2.	Calcium (mg/1)	APHA	75 (PSI)	4
3.	Turbidity (NTU)	APHA	5 (WHO)	<1
4.	Chloride (mg/1)	APHA	250 (WHO)	25
5.	Conductivity (micro-S/cm)	APHA	NGVS	128
6.	Hardness as $CaCO_3$ (mg/1)	APHA	500 (WHO)	20
7.	Magnesium (mg/1)	APHA	150 (WHO)	2.4
8.	pH	APHA	6.5-8.5 (WHO)	6.83
9.	Potassium (mg/1)	APHA	12 (EC)	1.2
10.	Sodium (mg/1)	APHA	200 (WHO)	20
11.	Sulfate (mg/1)	APHA	250 (WHO)	2.0
12.	TDS (mg/1)	APHA	1000 (WHO)	82
13.	Nitrate (mg/1)	APHA	10 (WHO)	2.25
14.	Fluoride (mg/l)	APHA	1.5 (WHO)	0.02

NOTATION

ρ= density
g= gravitational acceleration
PL =pressure loss
P1,2= pressure at point 1 or 2
Q= flow rate
A= Area
V = velocity
d= diameter of the pipe/tube

gpd = gallons per day
lpm = liters per minute

REFERENCES

[1]. WHO/UNICEF Joint Water Supply and Sanitation Monitoring Programme, World Health Organization, and UNICEF, Eds., *Meeting the MDG drinking water and sanitation target: the urban and rural challenge of the decade*. Geneva, Switzerland : New York: World Health Organization ; United Nations Children's Fund, 2006.

[2]. W. H. Organization, *Guidelines for drinking-water quality: recommendations*, vol. 1. World Health Organization, 2004.

[3]. "WWF-Pakistan-2007-Pakistans.pdf." .

[4]. M. Memon, M. S. Soomro, M. S. Akhtar, and K. S. Memon, "Drinking water quality assessment in Southern Sindh (Pakistan)," *Environmental Monitoring and Assessment*, vol. 177, no. 1–4, pp. 39–50, 2011.

[5]. S. Haydar, M. Arshad, and J. A. Aziz, "Evaluation of drinking water quality in urban areas of Pakistan: A case study of Southern Lahore," *Pakistan Journal of Engineering and Applied Sciences*, 2016.

[6]. "http://www.dailytimes.com.pk/islamabad/27-Feb-2014/people-at-high-risk-of-infectious-diseases-due-to-contaminated-water."

[7]. I. A. Khan, "'84pc of population lacks access to safe drinking water,'" *DAWN.COM*, 08-Mar-2017. [Online]. Available: https://www.dawn.com/news/1319157.

[8]. A. Azizullah, M. N. K. Khattak, P. Richter, and D.-P. Häder, "Water pollution in Pakistan and its impact on public health — A review," *Environment International*, vol. 37, no. 2, pp. 479–497, Feb. 2011.

[9]. "Techno-economic assessment and environmental impacts of desalination technologies," *Desalination*, vol. 266, no. 1–3, pp. 263–273, Jan. 2011.

[10]. "ESCWA (Economic and Social Commission for Western Asia), Role of Desalination in Addressing Water Scarcity 2009, 2009 November.

[11]. "(4) Ashkelon desalination plant - A successful challenge." [Online]. Available: https://www.researchgate.net/publication/222704652_Ashkelon_desalination_plant_-_A_successful_challenge.

[12]. A. M. Bilton, R. Wiesman, A. F. M. Arif, S. M. Zubair, and S. Dubowsky, "On the feasibility of community-scale photovoltaic-powered reverse osmosis desalination systems for remote locations," *Renewable Energy*, vol. 36, no. 12, pp. 3246–3256, 2011.

[13]. "Concentrating solar power for seawater desalination e final report, Stuttgart, Germany; 2007.

[14]. "The role of desalinated water in augmentation of the water supply in selected ESCWA member countries," 2001.

[15]. T. Winter, D. J. Pannell, and L. McCann, "The Economics of Desalination and It's Potential Application to Australia," p. 13.

[16]. "Water desalination report, vol. 45 (17), Global Water Intelligence, 2009 May 4."

[17]. T. Younos, "The economics of desalination," *Journal of Contemporary Water Research & Education*, vol. 132, no. 1, pp. 39–45, 2005.

[18]. "Water desalination report, vol. 45 (2), Global Water Intelligence, 2009 January 12."

[19]. Y. Zhou and R. S. Tol, "Evaluating the costs of desalination and water transport," *Water resources research*, vol. 41, no. 3, 2005.

[20]. C. Sommariva, H. Hogg, and K. Callister, "Environmental impact of seawater desalination: relations between improvement in efficiency and environmental impact," *Desalination*, vol. 167, pp. 439–444, 2004.

[21]. S. Adnan, A. Hayat Khan, S. Haider, and R. Mahmood, "Solar energy potential in Pakistan," *Journal of Renewable and Sustainable Energy*, vol. 4, no. 3, p. 032701, 2012.

[22]. M. N. Bhutta, M. R. Chaudhry, and A. H. Chaudhry, "Groundwater quality and availability in Pakistan," in *Proceedings of the seminar on strategies to address the present and future water quality issues*, 2005.

[23]. "DW-String-Wound-Filters, Delta Pure (2015), Available: www.deltapure.com".

[24]. DOW FILMTEC Product data sheet, (2017), Available: http://media.wattswater.com/WattsCarbonBlockSS.pdf [Accessed: 25 August 2018].

[25]. DOW FILMTEC Product data sheet, (2017), Available: http://msdssearch.dow.com/PublishedLiteratureDOWCOM/dh_099d/0901b8038099d1b8.pdf?filepath=liquidseps/pdfs/noreg/609-50108.pdf&fromPage=GetDoc [Accessed: 25 August 2018].

[26]. "PCRWR | HOME." [Online]. Available: http://www.pcrwr.gov.pk/.